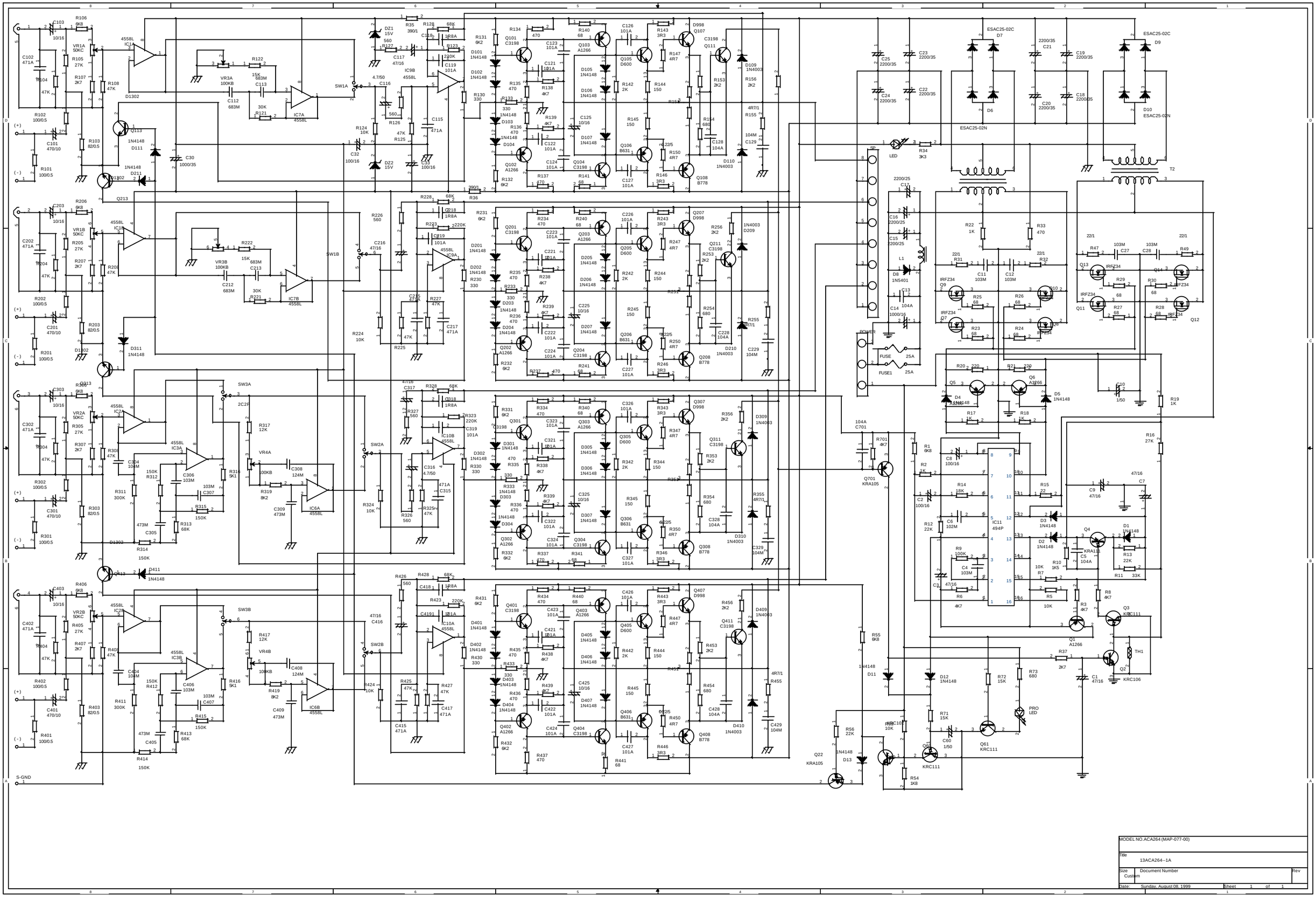
MODEL NO.ACA264 (MAP-077-00)
Title
13ACA264--1A
Size: Custom
Document Number
Rev
Date: Sunday, August 08, 1999
Sheet 1 of 1